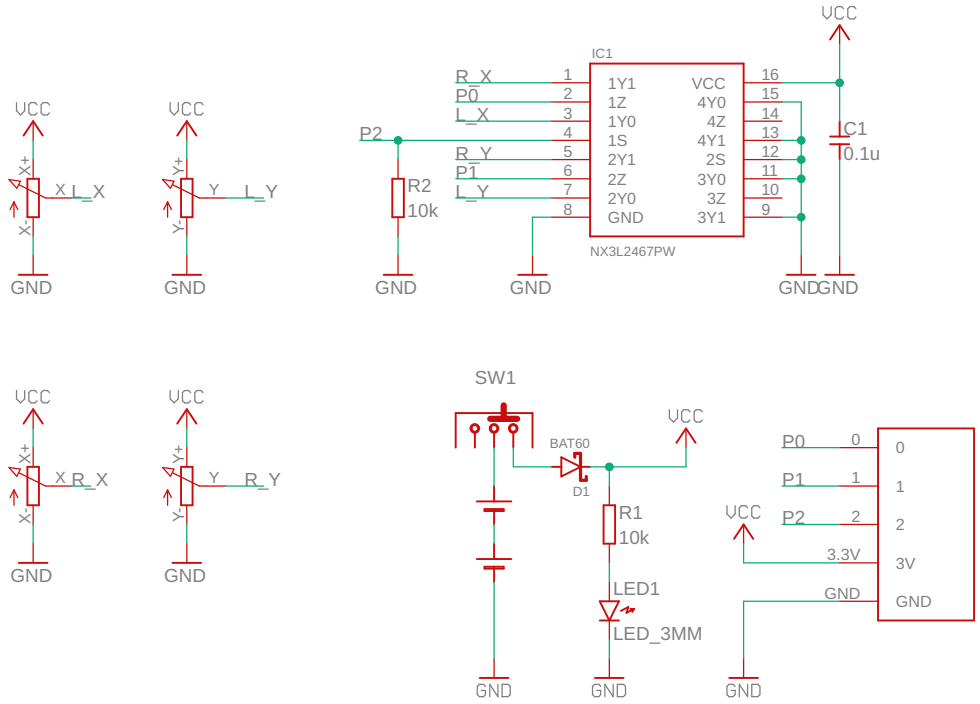

Switch Education, Inc.

microbit_remocon_joystick

not saved!

Sheet: 1/1